ME 354 THERMODYNAMICS LAB
THE REFRIGERATION CYCLE

INTRODUCTION:

The attached figure shows schematically the basic refrigeration unit located in the Heat Transfer Lab, E3-2108. The working substance is R141b, dichlorofluoroethane.

Carefully inspect the unit schematic and the cycle diagram. Identify the four key components of the basic refrigerator/heat pump: compressor, evaporator, condenser, and the expansion valve. Note that the unit is equipped with 2 pressure gauges, 6 thermometers, and 2 flow meters. Note that the pressure dials show the gauge pressure (not the absolute pressure), and that the flow meter readings are taken using the top of the float.

There is a voltmeter and an ammeter for determining the power input to the electric motor driving the compressor. This input power is then passed through a transformer where the line voltage is stepped up to 220 volts, required by the compressor motor. The power input to the compressor can be determined as follows:

$$\begin{aligned} P &= (\textbf{line voltage} \times \textbf{current} \times \textbf{power factor}) - \textbf{transformer losses} \\ &= V \cdot I \cdot PF - \textbf{transformer losses} \end{aligned}$$

where the voltage and current are as measured, the power factor ($\cos\phi$) is 0.412 and the transformer losses are $13\ W$.

A compressor thermal efficiency of $\eta_C = 0.76$ can be used to estimate the heat loss from the compressor to the surrounding air under typical operating conditions.

OPERATION:

Turn on the water supplies (arbitrary amounts) to the evaporator and condenser, turn the **yellow valve to the open position**, switch on the compressor and allow the cycle to stabilize.

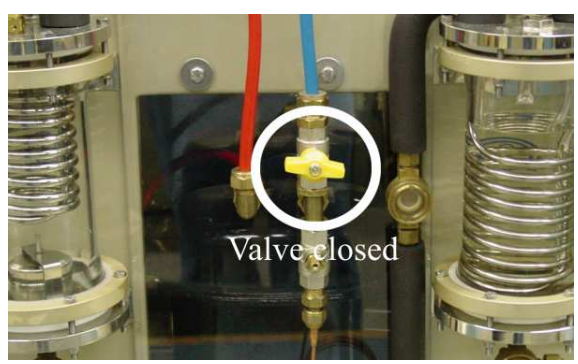

DO NOT RUN THE UNIT WITH ZERO WATER FLOW

Carefully observe the following processes in the cycle. If you are the last group of the day, return the **valve to the closed position** when your testing is complete.

- **Process 1 - 2:** The compressor creates a relatively low pressure in the evaporator and a relatively high pressure in the condenser.
- **Process 2 - 3:** In the condenser, the refrigerant condenses at high (in relative terms) pressure and temperature while rejecting energy to the water flowing through the coil. Thus the water is heated, producing the *heat pump* effect. Heat transfer between the condenser and the surrounding air can be estimated using Newton's Law of Cooling given as $Q = hA\Delta T$, where Q is the heat transfer in watts, h is the heat transfer coefficient (W/m^2K) for convective cooling from vertical surfaces and A is the exposed surface area of the condenser in square meters. To simplify calculations, the heat transfer between the condenser and the surrounding air is estimated to be $Q_{cond} = 0.8(T_{air} - T_{cond})$, where the difference in temperature between the condenser and the surrounding air dictates the direction of heat flow.
- **Process 3 - 4:** The high pressure liquid leaves the condenser through a float controlled expansion valve. The pressure drop in the valve causes some of the liquid to flash into vapour, resulting in a two-phase flow which can be observed through the sight-glass located along the return line to the evaporator.
- **Process 4 - 1:** In the evaporator, the refrigerant boils at low pressure and temperature while removing energy from the water flowing through the coil. Thus, the water is chilled, producing the *refrigeration* effect. Again using Newton's Law of Cooling, the heat transfer between the evaporator and the surrounding air can be estimated as $Q_{evap} = 0.8(T_{air} - T_{evap})$, where the magnitude of the temperature in the evaporator as compared to the surrounding air temperature will dictate the direction of heat flow.

THE TASK:

Using the attached table of "OBSERVATIONS", record the room temperature and pressure, and all instrument readings after the unit stabilizes at *arbitrarily* chosen water flow rates between 5 g/s and the maximum available amount. You are strongly encouraged to perform more than one test, preferably over a wide range flow rates.

1. Calculate the COP (=benefit/cost) of the unit as a Refrigerator and as a Heat Pump. State your assumptions clearly.
2. Calculate the mass flow rate, $\dot{m}$, of the refrigerant. State your assumptions clearly.
3. Determine P, h and T values for all states 1-4, and show the cycle on a neatly drawn $P - h$ diagram.
4. One lab report should be submitted for each group of two students. When preparing your lab report, it is important to be clear in your message, thorough but brief, with a typical report not exceeding 20 pages. (including all calculations, figures and graphs)
   Note: For convenience, calculations can be presented in hand written form.

5. Approximately 60% of the mark for the lab will be given for a clear, accurate presentation of the cycle analyses described in points 1-3. The remaining 40% of the mark will be given for a demonstration of understanding beyond the basic calculations. **Try to be creative here.** This will include but is not limited to the following:

    - a sensitivity analysis of the measured data, for instance, what effect does our inability to accurately measure temperatures with standard thermometers have on the calculated value of COP.
    - why do the experimental results differ from a typical textbook analysis of a refrigeration cycle? Elaborate on the relevant sources of error in our experimental apparatus. While conducting the lab, try to devise procedures for quantifying sources of error.

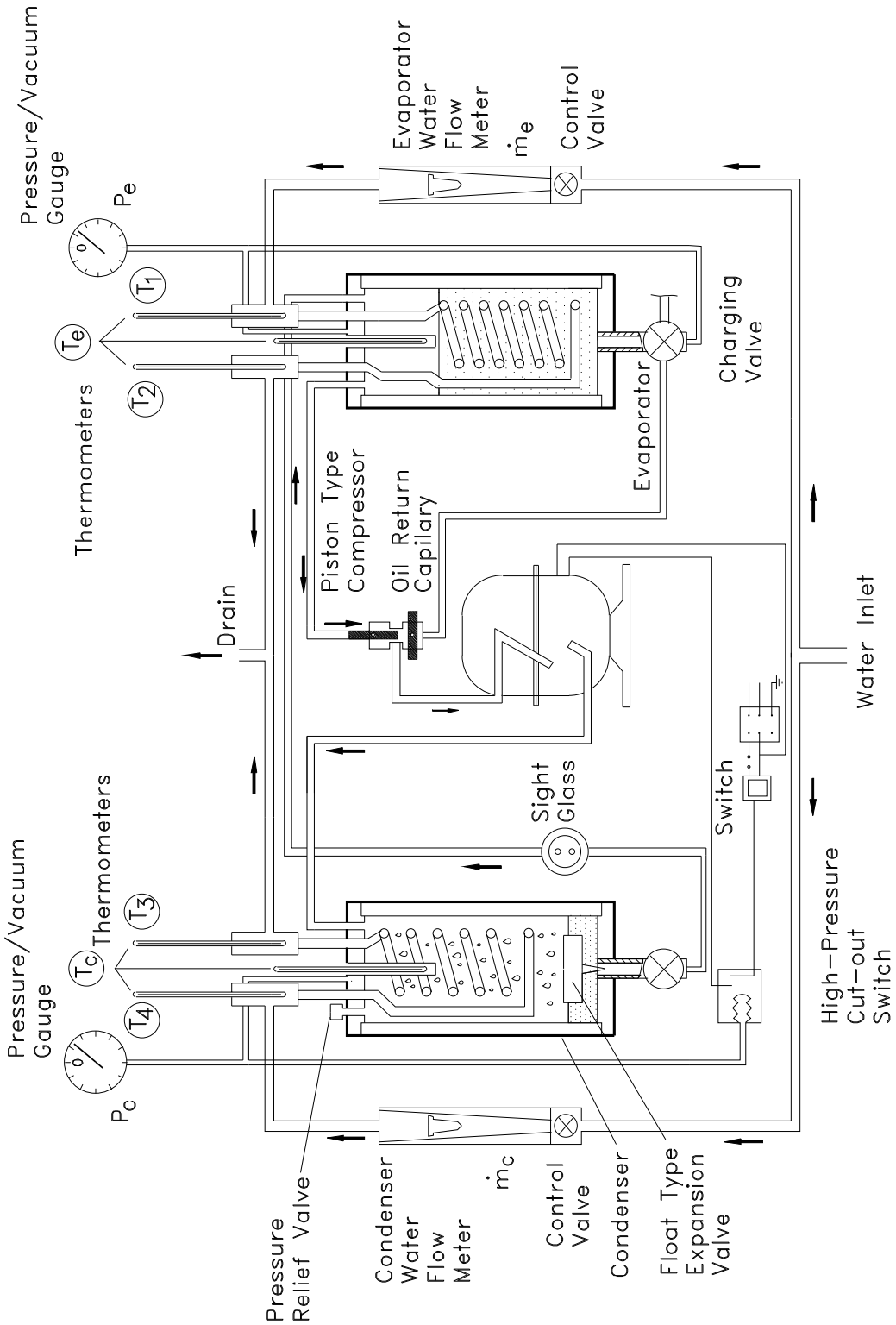

Refrigeration Cycle Demonstration

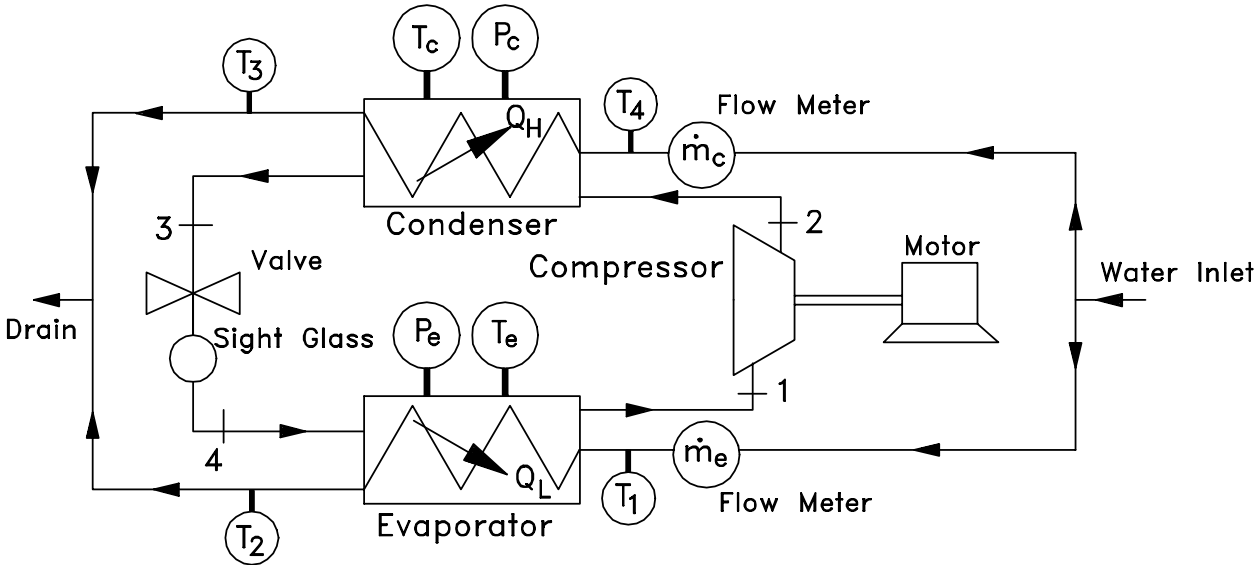

Schematic Diagram

OBSERVATIONS:

Room Temperature (T_a)	=	_____	$°C$
Barometer	=	_____	$in.Hg$
	=	_____	kN/m^2
Electrical power to run the compressor motor			
Voltage	=	_____	V
Current	=	_____	A

Test No.	1	2	3
Evaporator Gauge Pressure, P_e (kN/m^2)			
Evaporator Temperature, T_e ($°C$)			
Evaporator Water Flow Rate, $\dot{m}_e$ (g/s)			
Evaporator Water Inlet Temp., T_1 ($°C$)			
Evaporator Water Outlet Temp., T_2 ($°C$)			
Condenser Gauge Pressure, P_c (kN/m^2)			
Condenser Temperature, T_c ($°C$)			
Condenser Water Flow Rate, $\dot{m}_c$ (g/s)			
Condenser Water Inlet Temp., T_4 ($°C$)			
Condenser Water Outlet Temp., T_3 ($°C$)			

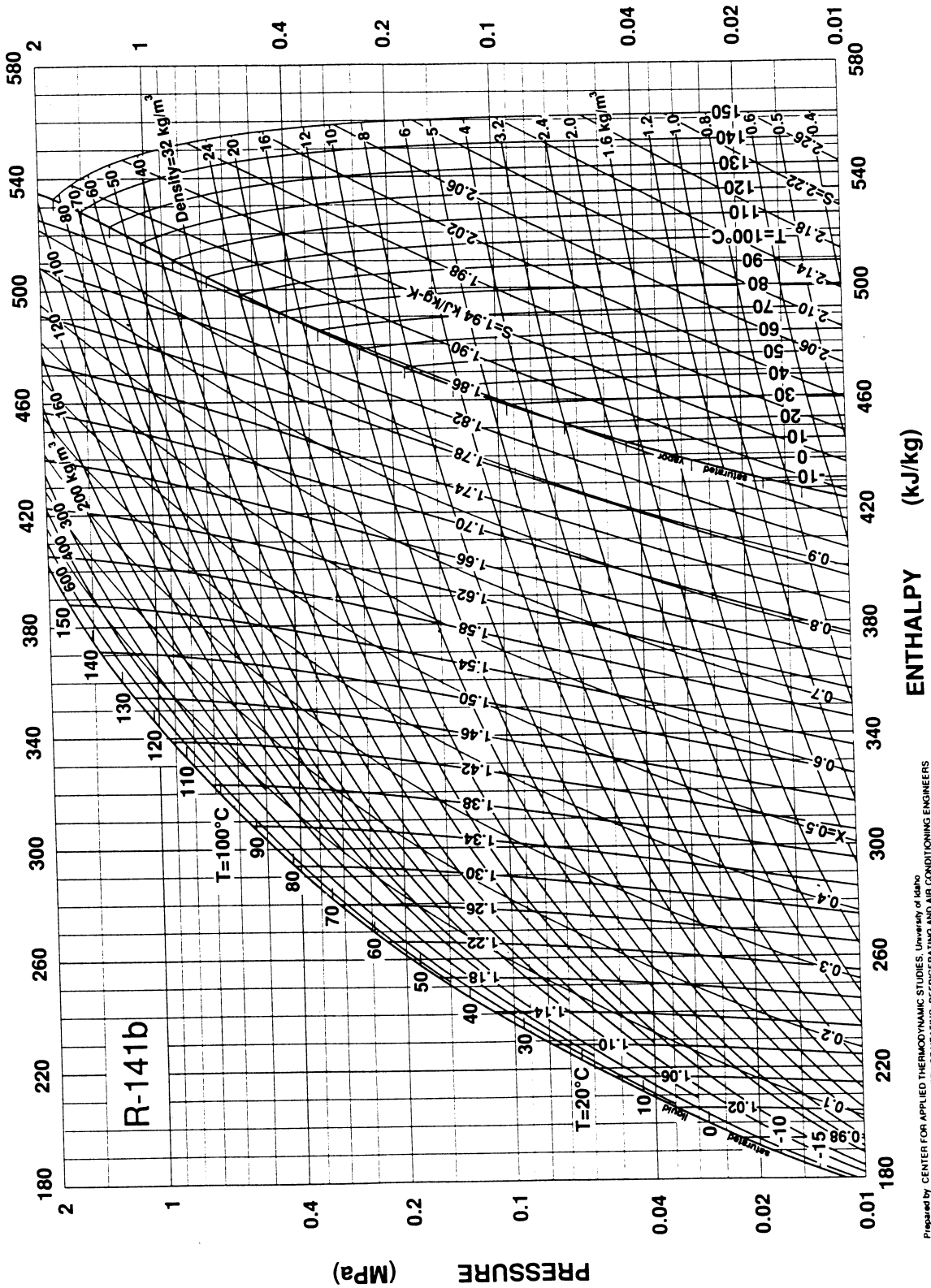

Prepared by CENTER FOR APPLIED THERMODYNAMIC STUDIES, University of Idaho

Fig. 15 Pressure-Enthalpy Diagram for Refrigerant 141b

Refrigerant 141b (1,1-dichloro-1-fluoroethane) Properties of Saturated Liquid and Saturated Vapor

Temp.* °C	Pressure, MPa	Density, kg/m³ Liquid	Volume, m³/kg Vapor	Enthalpy, kJ/kg Liquid	Enthalpy, kJ/kg Vapor	Entropy, kJ/(kg·K) Liquid	Entropy, kJ/(kg·K) Vapor	Specific Heat c_p, kJ/(kg·K) Liquid	Specific Heat c_p, kJ/(kg·K) Vapor	c_p/c_v Vapor	Velocity of Sound, m/s Liquid	Velocity of Sound, m/s Vapor	Viscosity, μPa·s Liquid	Viscosity, μPa·s Vapor	Thermal Cond, mW/(m·K) Liquid	Thermal Cond, mW/(m·K) Vapor	Surface Tension, mN/m	Temp, °C
-20.00	0.01036	1312.4	1.7237	178.25	424.39	0.9174	1.8898	—	0.689	1.120	—	141.	731.0	—	108.7	—	—	-20.00
-18.00	0.01155	1308.8	1.5586	180.22	425.72	0.9252	1.8874	—	0.692	1.120	—	141.	709.8	—	107.9	—	—	-18.00
-16.00	0.01284	1305.1	1.4118	182.26	427.05	0.9331	1.8851	—	0.696	1.119	—	142.	689.6	—	107.1	—	—	-16.00
-14.00	0.01425	1301.5	1.2811	184.36	428.38	0.9413	1.8829	—	0.700	1.119	—	142.	670.4	—	106.3	—	—	-14.00
-12.00	0.01578	1297.8	1.1646	186.51	429.72	0.9495	1.8808	—	0.703	1.119	—	143.	652.1	—	105.5	—	—	-12.00
-10.00	0.01745	1294.2	1.0604	188.70	431.06	0.9579	1.8789	—	0.707	1.119	—	143.	634.6	—	104.7	—	—	-10.00
-8.00	0.01926	1290.5	0.96724	190.92	432.40	0.9663	1.8770	—	0.711	1.119	—	144.	617.9	—	103.9	—	—	-8.00
-6.00	0.02122	1286.9	0.88369	193.16	433.75	0.9747	1.8753	—	0.714	1.119	—	144.	602.0	—	103.1	—	—	-6.00
-4.00	0.02334	1283.2	0.80866	195.43	435.10	0.9832	1.8736	—	0.718	1.119	—	144.	586.7	—	102.3	—	—	-4.00
-2.00	0.02564	1279.5	0.74116	197.71	436.45	0.9916	1.8720	—	0.722	1.119	—	145.	572.1	—	101.5	—	—	-2.00
0.00	0.02811	1275.8	0.68033	200.00	437.80	1.0000	1.8706	—	0.726	1.119	—	145.	558.2	—	100.7	—	21.34	0.00
2.00	0.03076	1272.1	0.62543	202.30	439.15	1.0084	1.8692	—	0.729	1.119	—	145.	544.8	—	100.0	—	21.08	2.00
4.00	0.03362	1268.4	0.57579	204.60	440.51	1.0167	1.8679	—	0.733	1.119	—	146.	531.9	—	99.2	—	20.82	4.00
6.00	0.03669	1264.7	0.53085	206.90	441.87	1.0250	1.8667	—	0.737	1.119	—	146.	519.5	—	98.4	—	20.57	6.00
8.00	0.03998	1261.0	0.49008	209.21	443.22	1.0332	1.8655	—	0.741	1.119	—	147.	507.6	—	97.6	—	20.31	8.00
10.00	0.04350	1257.3	0.45305	211.51	444.58	1.0414	1.8645	—	0.745	1.119	—	147.	496.2	—	96.9	—	20.06	10.00
12.00	0.04726	1253.5	0.41936	213.82	445.94	1.0494	1.8635	—	0.749	1.119	—	147.	485.1	—	96.1	—	19.80	12.00
14.00	0.05128	1249.8	0.38867	216.12	447.31	1.0575	1.8626	—	0.753	1.119	—	148.	474.5	—	95.4	—	19.55	14.00
16.00	0.05557	1246.0	0.36067	218.42	448.67	1.0655	1.8618	—	0.757	1.120	—	148.	464.2	—	94.6	—	19.29	16.00
18.00	0.06014	1242.2	0.33508	220.72	450.03	1.0734	1.8610	—	0.761	1.120	—	148.	454.3	—	93.8	—	19.04	18.00
20.00	0.06500	1238.4	0.31167	223.02	451.40	1.0812	1.8603	—	0.765	1.120	—	148.	444.7	—	93.1	—	18.79	20.00
22.00	0.07016	1234.6	0.29022	225.32	452.76	1.0890	1.8596	—	0.769	1.121	—	149.	435.4	—	92.3	—	18.54	22.00
24.00	0.07565	1230.8	0.27055	227.61	454.12	1.0968	1.8590	—	0.773	1.121	—	149.	426.3	—	91.6	—	18.29	24.00
26.00	0.08147	1226.9	0.25248	229.91	455.49	1.1045	1.8585	—	0.777	1.121	—	149.	417.6	—	90.9	—	18.04	26.00
28.00	0.08764	1223.1	0.23586	232.21	456.85	1.1121	1.8580	—	0.782	1.122	—	150.	409.1	—	90.1	—	17.79	28.00
30.00	0.09417	1219.2	0.22055	234.51	458.22	1.1197	1.8576	—	0.786	1.122	—	150.	400.8	—	89.4	—	17.54	30.00
32.00	0.10108	1215.3	0.20644	236.82	459.58	1.1273	1.8573	—	0.790	1.123	—	150.	392.7	—	88.7	—	17.29	32.00
32.07b	0.10132	1215.2	0.20598	236.90	459.63	1.1275	1.8573	—	0.790	1.123	—	150.	392.5	—	88.6	—	17.28	32.07
34.00	0.10838	1211.5	0.19342	239.13	460.94	1.1348	1.8570	—	0.795	1.124	—	150.	384.9	—	87.9	—	17.04	34.00
36.00	0.11608	1207.5	0.18139	241.44	462.31	1.1423	1.8567	—	0.799	1.124	—	150.	377.2	—	87.2	—	16.79	36.00
38.00	0.12421	1203.6	0.17026	243.76	463.67	1.1497	1.8565	—	0.803	1.125	—	151.	369.7	—	86.5	—	16.55	38.00
40.00	0.13277	1199.7	0.15996	246.09	465.03	1.1572	1.8563	—	0.808	1.126	—	151.	362.4	—	85.8	—	16.30	40.00
42.00	0.14179	1195.7	0.15041	248.42	466.39	1.1646	1.8562	—	0.812	1.126	—	151.	355.3	—	85.0	—	16.06	42.00
44.00	0.15127	1191.7	0.14155	250.76	467.75	1.1719	1.8561	—	0.817	1.127	—	151.	348.2	—	84.3	—	15.81	44.00
46.00	0.16124	1187.7	0.13332	253.11	469.10	1.1793	1.8561	—	0.822	1.128	—	151.	341.4	—	83.6	—	15.57	46.00
48.00	0.17171	1183.7	0.12567	255.47	470.46	1.1866	1.8561	—	0.826	1.129	—	151.	334.6	—	82.9	—	15.33	48.00
50.00	0.18270	1179.6	0.11855	257.83	471.81	1.1940	1.8561	—	0.831	1.130	—	152.	328.0	—	82.2	—	15.09	50.00
52.00	0.19422	1175.6	0.11192	260.21	473.17	1.2012	1.8562	—	0.836	1.131	—	152.	321.4	—	81.5	—	14.85	52.00
54.00	0.20630	1171.5	0.10573	262.59	474.52	1.2085	1.8563	—	0.841	1.132	—	152.	315.0	—	80.8	—	14.60	54.00
56.00	0.21893	1167.4	0.09996	264.99	475.87	1.2158	1.8565	—	0.846	1.133	—	152.	308.7	—	80.1	—	14.36	56.00
58.00	0.23216	1163.2	0.09458	267.39	477.21	1.2230	1.8566	—	0.851	1.134	—	152.	302.4	—	79.4	—	14.13	58.00
60.00	0.24598	1159.1	0.08954	269.80	478.56	1.2303	1.8569	—	0.856	1.135	—	152.	296.3	—	78.7	—	13.89	60.00
62.00	0.26043	1154.9	0.08483	272.23	479.90	1.2375	1.8571	—	0.861	1.136	—	152.	290.2	—	78.0	—	13.65	62.00
64.00	0.27551	1150.7	0.08042	274.66	481.24	1.2447	1.8574	—	0.866	1.138	—	152.	284.2	—	77.3	—	13.41	64.00
66.00	0.29124	1146.5	0.07629	277.10	482.58	1.2518	1.8577	—	0.872	1.139	—	152.	278.2	—	76.6	—	13.18	66.00
68.00	0.30765	1142.2	0.07241	279.55	483.91	1.2590	1.8580	—	0.877	1.140	—	152.	272.3	—	76.0	—	12.94	68.00
70.00	0.32475	1137.9	0.06877	282.01	485.24	1.2662	1.8584	—	0.883	1.142	—	152.	266.5	—	75.3	—	12.71	70.00
72.00	0.34255	1133.6	0.06536	284.48	486.57	1.2733	1.8588	—	0.888	1.143	—	152.	260.7	—	74.6	—	12.48	72.00
74.00	0.36108	1129.2	0.06215	286.95	487.90	1.2804	1.8592	—	0.894	1.145	—	152.	255.0	—	74.0	—	12.24	74.00
76.00	0.38035	1124.8	0.05912	289.44	489.22	1.2875	1.8597	—	0.900	1.147	—	152.	249.3	—	73.3	—	—	76.00
78.00	0.40038	1120.4	0.05628	291.93	490.54	1.2946	1.8601	—	0.906	1.148	—	152.	243.7	—	72.6	—	—	78.00
80.00	0.42120	1116.0	0.05360	294.43	491.86	1.3016	1.8606	—	0.911	1.150	—	152.	238.1	—	72.0	—	—	80.00
82.00	0.44282	1111.5	0.05108	296.94	493.17	1.3086	1.8611	—	0.918	1.152	—	152.	—	—	71.3	—	—	82.00
84.00	0.46525	1107.0	0.04869	299.46	494.48	1.3156	1.8617	—	0.924	1.154	—	152.	—	—	70.6	—	—	84.00
86.00	0.48853	1102.5	0.04644	301.98	495.78	1.3226	1.8622	—	0.930	1.156	—	151.	—	—	70.0	—	—	86.00
88.00	0.51266	1097.9	0.04432	304.51	497.08	1.3296	1.8628	—	0.936	1.158	—	151.	—	—	69.3	—	—	88.00
90.00	0.53767	1093.2	0.04231	307.05	498.38	1.3365	1.8634	—	0.943	1.160	—	151.	—	—	68.7	—	—	90.00
92.00	0.56358	1088.6	0.04041	309.60	499.67	1.3435	1.8640	—	0.950	1.162	—	151.	—	—	68.1	—	—	92.00
94.00	0.59041	1083.9	0.03861	312.15	500.95	1.3504	1.8646	—	0.956	1.165	—	151.	—	—	67.4	—	—	94.00
96.00	0.61818	1079.1	0.03690	314.71	502.24	1.3573	1.8653	—	0.963	1.167	—	150.	—	—	66.8	—	—	96.00
98.00	0.64690	1074.3	0.03528	317.28	503.51	1.3641	1.8659	—	0.970	1.170	—	150.	—	—	66.1	—	—	98.00
100.00	0.67661	1069.5	0.03375	319.86	504.78	1.3710	1.8666	—	0.978	1.172	—	150.	—	—	65.5	—	—	100.00
105.00	0.75532	1057.2	0.03024	326.35	507.94	1.3881	1.8682	—	0.997	1.180	—	149.	—	—	63.9	—	—	105.00
110.00	0.84065	1044.5	0.02715	332.91	511.04	1.4051	1.8700	—	1.017	1.188	—	148.	—	—	62.4	—	—	110.00
115.00	0.93295	1031.5	0.02441	339.56	514.10	1.4221	1.8718	—	1.038	1.197	—	147.	—	—	60.9	—	—	115.00
120.00	1.0326	1018.2	0.02198	346.31	517.10	1.4391	1.8736	—	1.062	1.208	—	145.	—	—	59.4	—	—	120.00
125.00	1.1400	1004.4	0.01980	353.21	520.04	1.4563	1.8753	—	1.088	1.220	—	143.	—	—	—	—	—	125.00
130.00	1.2556	990.1	0.01785	360.28	522.88	1.4736	1.8770	—	1.117	1.235	—	141.	—	—	—	—	—	130.00
135.00	1.3797	975.3	0.01609	367.57	525.63	1.4913	1.8786	—	1.150	1.253	—	139.	—	—	—	—	—	135.00
140.00	1.5129	959.9	0.01449	375.13	528.24	1.5094	1.8800	—	1.188	1.275	—	136.	—	—	—	—	—	140.00
145.00	1.6555	943.8	0.01303	383.06	530.68	1.5281	1.8811	—	1.235	1.304	—	132.	—	—	—	—	—	145.00
150.00	1.8080	926.9	0.01168	391.45	532.88	1.5477	1.8819	—	1.294	1.344	—	128.	—	—	—	—	—	150.00

*temperatures are on the IPTS-68 scale

b = boiling point